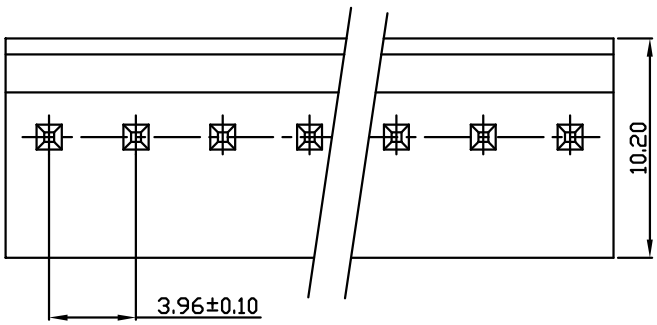

ORDERING INFORMATION:

KJ-3961WV-*P-* * (*)

- Part No
- Circuit No（pin位）
- :Tin plated / M:Matte-tin plated / G:Gold flash / G1:Gold 1u"
- Color
- Special Material:V-0

WAFER(180°)

RoHS

Part No:KJ-3961WV
Material:pin:Brass Tin-Plated
Base: Nylon66 UL94-V2
Circuits:2-20circuits available
Insulation Resistance:1000MΩ min
Withstand Voltage:1000V AC/minute
Current Rating:3A AC/DC
Voltage Rating:250V AC/DC

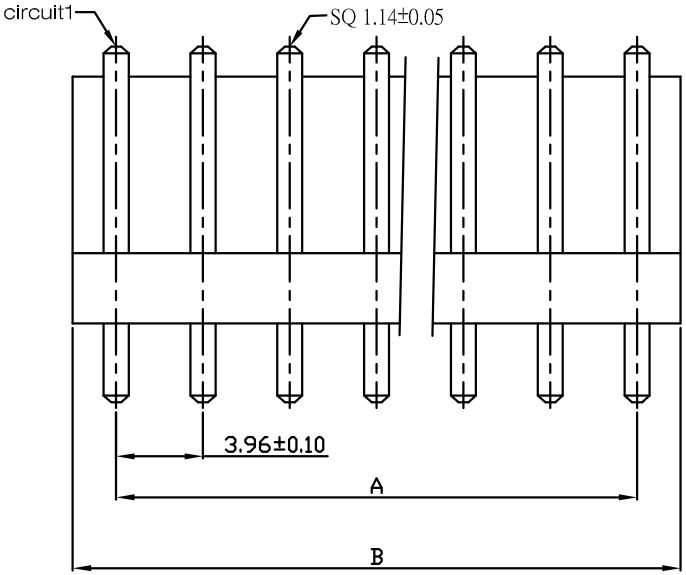

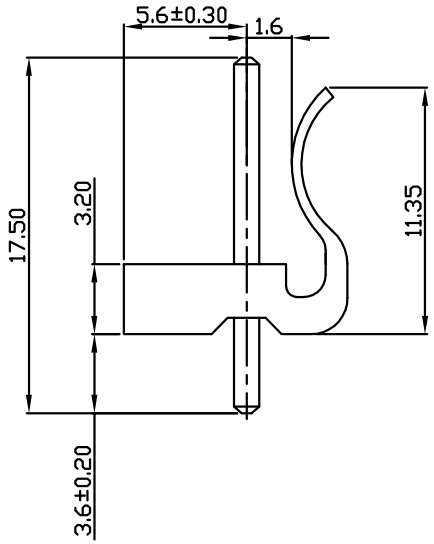

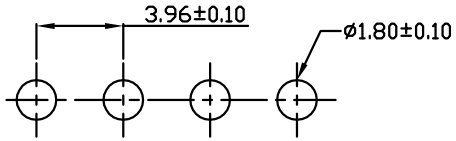

P.C.B. LAYOUT

Dimensions

circuit	A	B	circuit	A	B
		3.96	11	39.60	43.56
2	3.96	7.92	12	43.56	47.52
3	7.92	11.88	13	47.52	51.48
4	11.88	15.84	14	51.48	55.44
5	15.84	19.80	15	55.44	59.40
6	19.80	23.76	16	59.40	63.36
7	23.76	27.72	17	63.36	67.32
8	27.72	31.68	18	67.32	71.28
9	31.68	35.64	19	71.28	75.24
10	35.64	39.60	20	75.24	79.20

KJ 東莞嘉英電子厂 JIA YING ELECTRONICS		UNIT:MM	繪圖 DRAWING:	王三星	比例（SCALE): 3:1
		ANGLE ±2°	審核 CHECKED BY	凌 輝	名稱（TITLE): MX3.96彎靠背
DESCRIPTION:	MX3.96 WAFER 180° 彎靠背	DIM: .X±0.50 .XX±0.25 .XXX±0.10			存檔名稱（FILE): KJ-3961WV
					日期（DATE): 2009/06/22
PART NO:	KJ-3961WV	REV:A3	核准 APPROVAL BY	苗德蕙	PROJECTION: